HYDROLIC CONTROL

选 型 样 本

Hons D6 片式多路阀

Sectional Directional Control Valve



HYDROLIC CONTROL

产品概览与目录

Product overview and contents

D6 采用模块化片式结构，由进油片、工作片和回油片组成。工作片可选配辅助阀及不同阀芯，按执行机构、油路和控制要求组合。

D6 uses a modular sectional design with an inlet section, working sections and an outlet section. Auxiliary valves and interchangeable spools support configurations for different actuators, circuits and controls.

典型应用

Typical applications

挖掘装载机、轮式装载机、后置式挖掘装置、压实机、拉臂车、钻机、煤矿机械及起重机。

Backhoe loaders, wheel loaders, rear-mounted excavating equipment, compactors, hook-lift trucks, drilling rigs, mining machinery and cranes.

样册目录

Catalogue contents

03 技术规格 Technical specifications

04 工作介质 Hydraulic fluids

05 液压回路 Hydraulic circuits

06 外形尺寸 Overall dimensions

07 油口与螺纹 Ports and threads

08 特性曲线 Performance curves

09 订货示例 Ordering example

10 进油片 Inlet section

11 阀芯类型 Spool types

12 控制方式 Spool actuation

13 复位方式 Return arrangements

14 油口辅助阀 Port auxiliary valves

15 回油片与过桥 Outlet and HPCO

16 中间片 Intermediate sections

17 装配与维护 Assembly and maintenance

18 选型信息 Selection information

19 技术注释 Technical notes

20 品牌信息 Brand information

尺寸单位为 mm，压力单位为 bar，另有说明除外。

Dimensions in mm and pressure in bar unless otherwise stated.

技术规格

Technical specifications

项目 / Parameter	D6
工作片数量 Number of working sections	1-12
额定流量 Rated flow	100 L/min
最高工作压力 Maximum working pressure	350 bar
标准阀芯行程 Standard spool stroke	7 + 7 mm
串联阀芯单侧行程 Series-spool stroke per side	5 mm
浮动阀芯附加行程 Additional float stroke	6 mm
阀片间距 Section pitch	46 mm
回路类型 Circuit types	并联、串联、串并联 Parallel, series and tandem

标准工作条件

Standard working conditions

项目 / Parameter	恒石标准 / Hons standard
工作温度 Operating temperature	-20°C to +80°C
运动黏度 Kinematic viscosity	10-300 cSt
最大污染等级 Maximum contamination class	NAS 1638: 9 ISO 4406:1999: 20/18/15
推荐过滤精度 Recommended filtration	β10 > 75 (ISO 16889:2008)

HC 专册另列主回油 T 口最大压力 20 bar；电液先导回油条件见第 19 页。

HC lists a 20 bar maximum at the main T port. See page 19 for electrohydraulic pilot return limits.

工作介质与密封

Hydraulic fluids and seals

矿物油为常用工作介质。下表为恒石资料的介质与密封温度范围，整阀标准工作温度按第 3 页使用。

Mineral oil is the usual fluid. The table gives Hons fluid and seal temperature compatibility; the standard complete-valve temperature remains as stated on page 3.

介质 / Fluid	温度 / Temperature	密封 / Seal
矿物油 HL、HM 或 HLP Mineral oil HL, HM or HLP	-25°C to +80°C	NBR
高水基液压液 High-water-content hydraulic fluid	+5°C to +55°C	NBR
油包水乳化液 HFB Water-in-oil emulsion HFB	+5°C to +55°C	NBR
水乙二醇 HFC Water-glycol HFC	-10°C to +60°C	NBR

数据与曲线测试条件

Data and curve test conditions

恒石资料中数据与性能曲线以 50°C、运动黏度 32 cSt 的矿物油为测试介质。压降随联数、阀芯、黏度和配置变化。

Hons data and curves use mineral oil at 50°C and 32 cSt. Pressure loss varies with section count, spool type, viscosity and configuration.

HC 与恒石条件的区别

HC and Hons condition differences

HC-D6 专册列出 -25°C 至 +80°C、10-460 mm²/s 和 ISO 4406 19/16。恒石资料列出 -20°C 至 +80°C、10-300 cSt 和 ISO 4406:1999 20/18/15。本样册恒石选型以第 3 页为主，不将两组条件混用。

HC-D6 lists -25°C to +80°C, 10-460 mm²/s and ISO 4406 19/16. Hons lists -20°C to +80°C, 10-300 cSt and ISO 4406:1999 20/18/15. Use page 3 for Hons selection; keep the two sets of conditions distinct.

特殊介质、密封及超出标准条件的应用，应由恒石技术部门确认。

Confirm special fluids, seals and applications outside standard conditions with Hons technical support.

液压回路

Hydraulic circuits

BL 并联回路

Parallel circuit

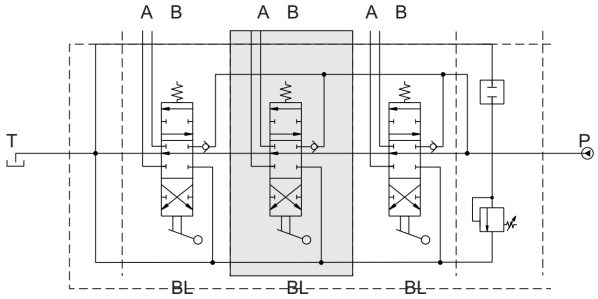

多个阀芯同时动作时，油液优先流向较低负载；可通过阀芯节流分配流量。

With several spools actuated, flow favours the lower load. Spool metering can distribute flow between services.

CB 串并联回路

Tandem circuit

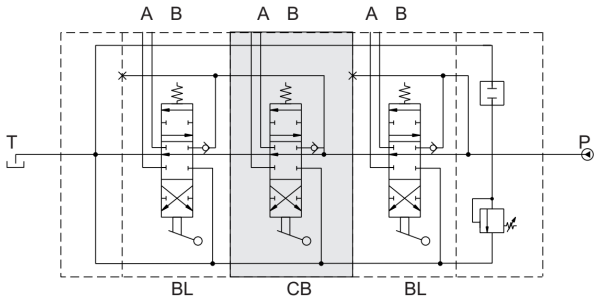

上游串并联片动作时，可阻断下游工作片的供油，上游工作片具有优先性。

An actuated upstream tandem section can interrupt supply to downstream sections and has priority.

CL 串联回路

Series circuit

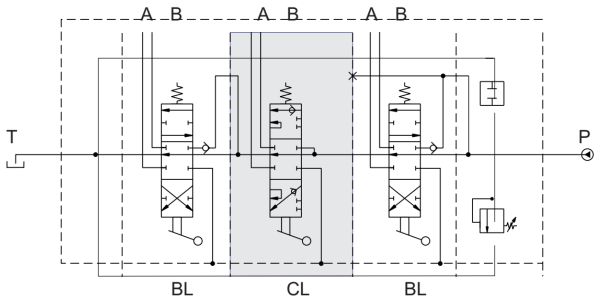

上游执行机构回油可供下游使用；选型时需核对串联工作压力叠加。

Return flow from an upstream actuator can feed downstream services. Check the combined pressure of active series stages.

BL、CB、CL 为恒石代码；HC 的并联与串联代码分别为 RP、RS。

BL, CB and CL are Hons codes. HC uses RP and RS for parallel and series sections.

外形尺寸与重量

Overall dimensions and weight

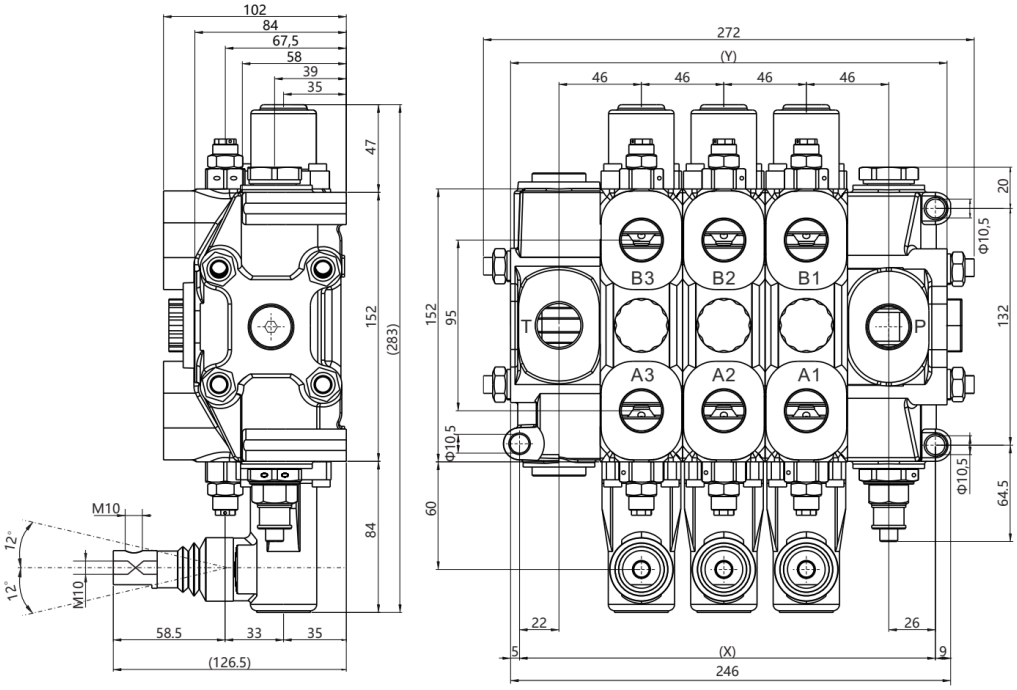

联数 / Sections	X (mm)	Y (mm)	重量 / Weight (kg)
1	140	156	11.6
2	186	202	16.1
3	232	248	20.5
4	278	294	25
5	324	340	29.4
6	370	386	33.9
7	416	432	38.3
8	462	478	42.8
9	508	524	47.2
10	554	570	51.7
11	600	616	56.1
12	646	662	60.6

数据对应图示标准配置；中间片及不同控制组件会改变外形与重量。安装使用最终确认图。

Values refer to the illustrated standard configuration. Intermediate sections and controls change the assembly; use the approved installation drawing.

油口与螺纹

Ports and threads

油口 Port	功能 / Function	BSP	UN-UNF
P	进油 Pressure inlet	G 1/2, G 3/4	7/8"-14 UNF
A, B	工作油口 Service ports	G 1/2, G 3/4	7/8"-14 UNF
T	回油至油箱 Tank return	G 3/4, G 1	1 1/16"-12 UNF
HPCO	中位压力输出 Power beyond	G 3/4, G 1	1 1/16"-12 UNF

螺纹代码对照

Thread code comparison

实际螺纹 / Thread	恒石 / Hons	HC
G 1/2	G08	G04
G 3/4	G10	G05
G 1	G16	G06
7/8"-14 UNF	U04	U04
1 1/16"-12 UNF	U05	U05

恒石 D6 的 P、A、B 口表列 G08、G10、U04；T、HPCO 口表列 G10、G16、U05。按各阀片位置选择可供螺纹，不将 HC 的 G04 写入恒石订货行。

Hons lists G08, G10 and U04 for D6 P/A/B ports, and G10, G16 and U05 for T/HPCO. Select available threads for each section and position. Keep HC G04 out of Hons ordering rows.

HC 补充：液压先导口 G 1/4，气动先导口 G 1/8。

HC supplement: hydraulic pilot ports G 1/4; pneumatic pilot ports G 1/8.

特性曲线

Performance curves

原恒石曲线采用标准工作片和 S001A 阀芯。D6/1 与 D6/12 分别代表 1 联和 12 联；Qp 为流量，Δp 为压降。

Original Hons curves use standard sections and an S001A spool. D6/1 and D6/12 mean one and twelve sections. Qp is flow rate and Δp is pressure loss.

进油至工作口 P → A/B

Pressure inlet to service port P → A/B

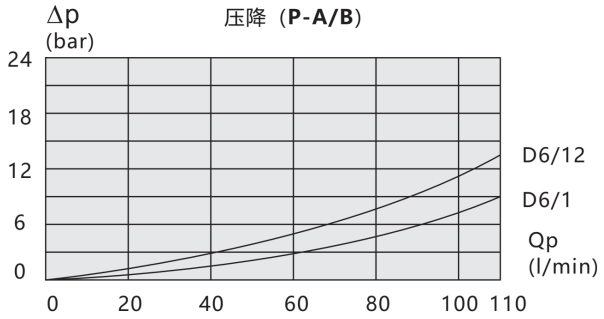

工作口至油箱 A/B → T

Service port to tank A/B → T

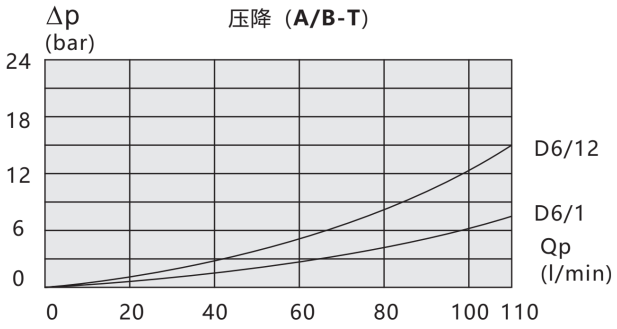

中位进油至油箱 P → T

Open-centre inlet to tank P → T

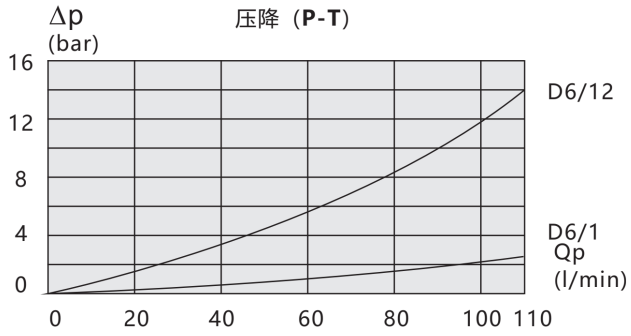

保留原曲线；图示范围延伸到 110 L/min 不改变 D6 的 100 L/min 额定流量。

Original curves are retained. A plotted range to 110 L/min does not change the 100 L/min rated flow.

订货示例

Ordering example

UV-D6/1 : P1 001 (150) A G08

S001A C001 F001A BL G08 01 PA (100) 01 PB (120)

T1 A G10

字段 / Field	示例 / Example	含义 / Meaning
产品与联数 Product and section count	UV-D6/1	D6，一联工作片 D6 with one working section
进油片 Inlet arrangement	P1 001 (150) A G08	右进油，组合 001，150 bar，上方 G 1/2 Right inlet; arrangement 001; 150 bar; upper G 1/2
阀芯与控制 Spool and actuation	S001A C001	标准双作用阀芯，手动控制 Standard double-acting spool; manual control
复位与油路 Return and circuit	F001A BL G08	弹簧复位，并联，G 1/2 工作口 Spring centring; parallel; G 1/2 service ports
A 口辅助阀 Port A auxiliary valve	01 PA (100)	过载阀，100 bar Port relief valve; 100 bar
B 口辅助阀 Port B auxiliary valve	01 PB (120)	过载阀，120 bar Port relief valve; 120 bar
回油片 Outlet arrangement	T1 A G10	右进油用单回油片，上方 G 3/4 Single tank return for right inlet; upper G 3/4

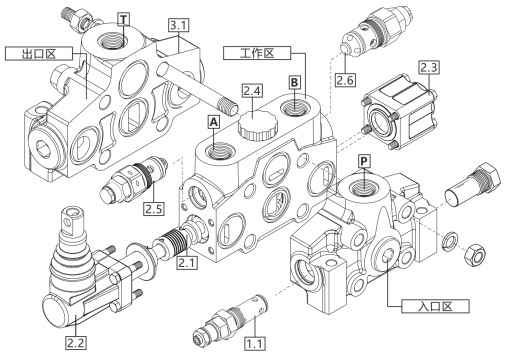

该行为依恒石字段组成的选型示例；每个工作片独立列出配置，示例压力按系统要求调整。

This illustrative row follows Hons fields. Specify every working section separately and choose settings for the actual system.

进油片配置

Inlet section configuration

代码 / Code	进油侧 / Inlet side
P1	右侧进油 Right-side inlet
P2	左侧进油 Left-side inlet

阀类型 / Valve type	功能 / Function
1	直动式主溢流阀 Direct-acting main relief valve
2	先导式主溢流阀 Pilot-operated main relief valve
3	溢流阀孔螺塞 Relief cavity plug
4	主防气蚀单向阀 Main anti-cavitation check valve
6	外部先导式溢流阀 Externally piloted relief valve
7 / 8	电磁卸荷阀 12 / 24 VDC Solenoid unloading valve 12 / 24 VDC
11	带测压口螺塞 Plug with pressure-gauge connection

进油口位置

Inlet port positions

代码 / Code	位置 / Position
A	上方进油 Upper inlet
B	上方进油，附 G 1/4 测压口 Upper inlet with G 1/4 gauge connection
C	侧面进油 Side inlet
D	侧面进油，附 G 1/4 测压口 Side inlet with G 1/4 gauge connection

恒石组合 001 = 1A + 3B；HC 组合 009 = 2A + 3B。有主溢流阀时须注明设定压力。

Hons arrangement 001 = 1A + 3B; HC 009 = 2A + 3B. Specify the main relief setting.

阀芯类型

Spool types

S001A / S001B

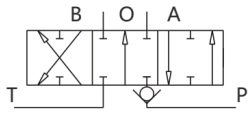

三位双作用

Three-position double acting

S002A / S002B

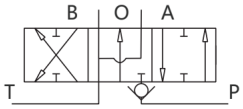

三位双作用，中位 A、B 通 T

Double acting; A and B to T in neutral

S005A / S005B

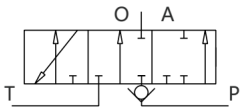

三位，A 口单作用

Three-position single acting on A

S006A / S006B

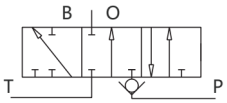

三位，B 口单作用

Three-position single acting on B

S012A / S012B

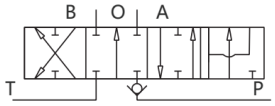

四位双作用，第四位浮动

Four-position double acting with float

S016A / S016B

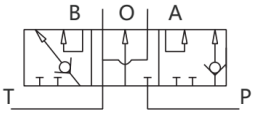

三位双作用串联，A、B 通 T

Double acting series; A and B to T

A = 标准，B = 节流。源表 S0012 / S0016 按说明规范为 S012 / S016；特殊阀体和浮动定位须配套确认。

A = standard, B = metered. Source S0012/S0016 labels are normalised to S012/S016 as in its notes. Confirm special bodies and float detents.

阀芯控制方式

Spool actuation

C001 / C002

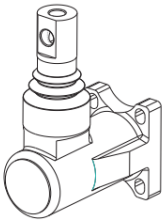

带护罩操作杆 / 操作端旋转 180°

Protected lever / actuation rotated 180°

C004

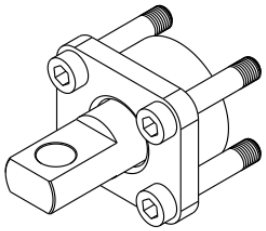

无操作杆控制装置

Actuation without lever

C005

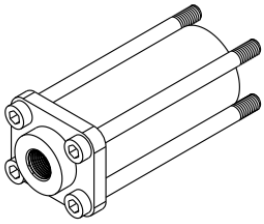

液压先导控制

Hydraulic pilot actuation

气动及电液控制

Pneumatic and electrohydraulic controls

气动开关及比例控制分别使用 F020A、F022A；电液开关及比例控制使用复位端组件系列，详见第 13、19 页。C005 液压控制订货时省略独立复位端代码。

Pneumatic on-off and proportional controls use F020A and F022A. Electrohydraulic on-off and proportional controls use return-end kits; see pages 13 and 19. Omit a separate return-end code when ordering C005.

恒石 D6 标准控制表未列 C036/C037 直动电磁组件；D6 电气控制按电液组件选型。

Hons D6 does not list C036/C037 direct-solenoid kits in its standard table. Select the listed electrohydraulic kits for D6 electrical operation.

复位与远程控制组件

Return and remote control kits

代码 / Code	功能 / Function
F001A / B / C	弹簧复位：标准 / 软 / 重型 Spring centring: standard / soft / heavy
F002A / F003A / F004A	A、B 双定位 / A 定位 / B 定位 Detents in A and B / A only / B only
F005A	第四位定位，用于浮动阀芯 Fourth-position detent for float spool
F013A / B / C	双向操作，三种弹簧强度 Dual control with three spring loads
F020A / F022A	气动开关 / 气动比例 Pneumatic on-off / proportional
F1600 / F1610	电液开关量，12 / 24 VDC Electrohydraulic on-off, 12 / 24 VDC
F2600 / F2610	电液比例量，12 / 24 VDC Electrohydraulic proportional, 12 / 24 VDC
F1520 / F1530	带减压阀电液开关量，12 / 24 VDC On-off with reducing valve, 12 / 24 VDC
F2520 / F2530	带减压阀电液比例量，12 / 24 VDC Proportional with reducing valve, 12 / 24 VDC

D6 复位弹簧载荷

D6 spring loads

类型 / Type	预载 / Preload K1	行程终点 / End load K2
A 标准 / Standard	137.3 N	176.6 N
B 软 / Soft	109.8 N	141.2 N
C 重型 / Heavy	168.7 N	259 N

组件须与阀芯、阀体及先导供回油方案配套；比例电流参数见第 19 页。

Match the kits to the spool, body and pilot supply/return circuit. Proportional current data are on page 19.

油口辅助阀

Port auxiliary valves

A、B 工作油口分别指定辅助阀。PA 为 A 口，PB 为 B 口；辅助阀孔存在时，两侧都应明确装阀或封堵。

Specify auxiliary valves separately for service ports A and B. PA denotes A and PB denotes B. For auxiliary-valve cavities, specify a valve or plug on both ports.

类型 Type	A / B 代码	功能 / Function
01	01 PA / 01 PB	过载阀 Port relief / antishock valve
02	02 PA / 02 PB	补油阀 Anti-cavitation valve
03	03 PA / 03 PB	过载补油阀 Combined relief and anti-cavitation valve
04	04 PA / 04 PB	先导式过载补油阀 Pilot-operated combined valve
05	05 PA / 05 PB	辅助阀孔堵头 Auxiliary cavity plug

设定压力的表达

Specifying pressure settings

01 PA (120) 表示全流量设定；01 PA (120-A) 表示最小流量开启设定。过载阀与组合阀必须给出设定压力，并确认采用哪一种设定口径。

01 PA (120) means a full-flow setting; 01 PA (120-A) means a minimum-flow cracking setting. Specify a pressure for relief and combined valves and confirm which setting basis is required.

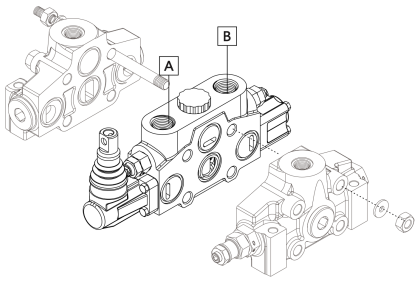

04 为恒石表列选项；HC 专册的辅助阀表列 01、02、03、05。

04 is listed by Hons. The HC dedicated auxiliary-valve table lists 01, 02, 03 and 05.

回油片与中位压力输出

Outlet section and power beyond

恒石代码	HC 代码	配置 / Arrangement
T1	TJ	右进油用单回油片 Single tank return for right-side inlet
T2	TK	左进油用单回油片 Single tank return for left-side inlet
T3	TM	右进油用 HPCO 回油片 HPCO outlet for right-side inlet
T4	TN	左进油用 HPCO 回油片 HPCO outlet for left-side inlet

位置代码 / Position	配置 / Arrangement
A / C	单回油：上方 T / 侧面 T Single return: upper T / side T
M / N	上方 HPCO；T 在 B 侧 / A 侧 Upper HPCO; T on side B / A
P / Q	侧面 HPCO；T 在 B 侧 / A 侧 Side HPCO; T on side B / A

HPCO 向下游阀供油时，工作口回油必须通过独立 T 口回油箱。安装圆锥堵头后，中位通道与回油通道分开。

When HPCO feeds a downstream valve, service-port return flow must reach tank through a separate T connection. A conical plug separates the open-centre and return galleries.

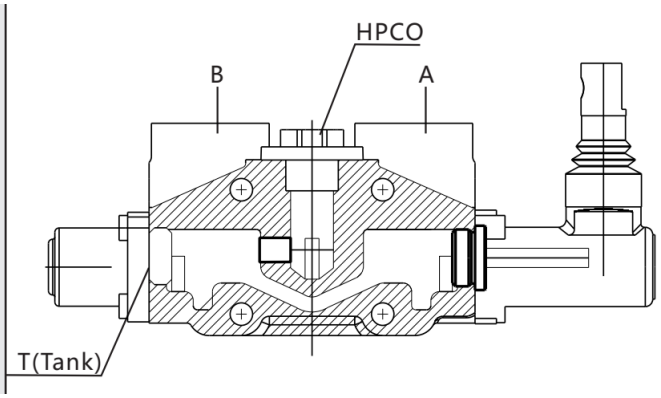

恒石圆锥堵头代码 601099034，G 1/4 × 13；HC 代码 413010203。两者分别按供应方确认。

Hons plug code: 601099034, G 1/4 × 13. HC code: 413010203. Confirm the part with the respective supplier.

中间片与分流组件

Intermediate sections and flow divider

类型 / Type	功能 / Function
BE	中间进油片，增加进油点 Intermediate inlet section providing an additional inlet
BV	带溢流阀的中间片 Intermediate section with pressure relief valve
BF	中间回油片，单独 T 回油 Intermediate outlet with a single tank return
BG	中间回油片，带 T 与 HPCO Intermediate outlet with T and HPCO

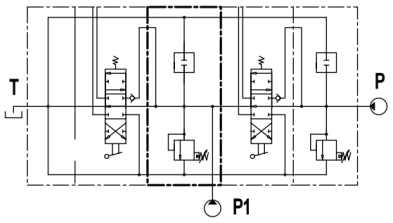

中间片会增加总长，并改变内部油路连接，须与泵、前后工作片及回油方案一起确定。

Intermediate sections increase length and alter gallery connections. Select them with the pump, adjacent sections and return circuit.

HC 中间分流片

HC intermediate flow divider

HC 代码 C001 为螺钉调节中间分流片，可向下游提供独立于负载的设定流量；余流可供另一阀或返回油箱。调节范围为 3-40 L/min。

HC code C001 identifies a screw-adjustable intermediate flow divider. It supplies a set flow independently of downstream load; excess flow can feed another valve or return to tank. The adjustment range is 3-40 L/min.

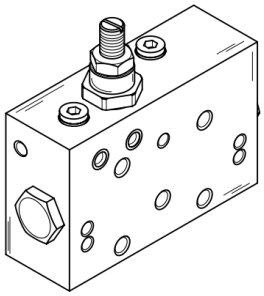

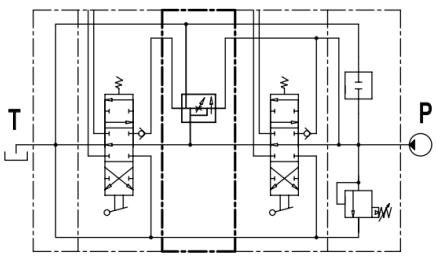

恒石 C001 表示手动控制，HC C001 在此表示分流片；代码相同但功能不同。

Hons C001 means manual actuation; HC C001 here means a flow divider. The same code has different functions.

装配与维护

Assembly and maintenance

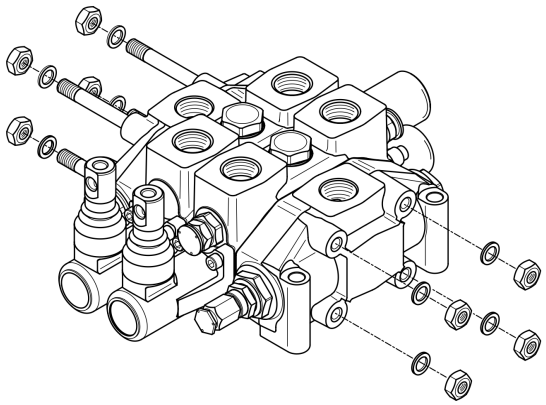

项目 / Item	D6
阀片连接螺杆套件 Section tie-rod kits	4 套 / 4 kits
连接螺杆锁紧扭矩 Section tie-rod clamping torque	50 N·m
HC 标准螺杆长度，1 至 12 联 HC standard rod length, 1 to 12 sections	180, 226, 272, 318, 364, 410, 456, 502, 548, 594, 640, 686 mm

HC-D6 典型组件扭矩

HC-D6 typical component torques

组件 / Component	扭矩 / Torque
主溢流阀阀体 / 替代螺塞 / 单向阀螺塞 Main relief body / replacement plug / check plug	80 N·m
主溢流阀调节帽 Main relief adjustment cap	20 N·m
辅助阀阀体 / 辅助阀帽 Auxiliary valve body / cap	80 / 25 N·m

组装前清洁阀片和油道，检查密封；按确认图连接 P、T、A、B 及先导管路。电液控制连接杆套件须单独选型，不能以阀片连接螺杆套件代替。

Clean sections and galleries and inspect seals before assembly. Connect P/T/A/B and pilot lines to the approved drawing. Select the electrohydraulic control tie-rod kit separately from the main section tie rods.

50 N·m 经恒石与 HC 资料相互核对；其他 HC 扭矩仅用于相应 HC 组件，恒石组件按确认文件执行。

Both catalogues specify 50 N·m for section rods. Other HC torque values apply to the corresponding HC parts; use confirmed values for Hons parts.

选型信息与配置清单

Selection information and configuration list

步骤 / Step	项目 / Item	需提供信息 / Required information
01	系统参数 System duty	泵流量、工作压力、介质、温度与回油背压 Pump flow, working pressure, fluid, temperature and return pressure
02	执行机构 Actuators	联数、单/双作用、浮动或串联机能 Section count, single/double acting, float or series functions
03	工作片 Working sections	逐联指定阀芯、控制、复位、油路和螺纹 Specify spool, actuation, return, circuit and ports per section
04	保护功能 Protection	主溢流压力；A、B 油口辅助阀及设定 Main relief setting; A/B auxiliary valves and pressures
05	进回油 Inlet and outlet	左右进油、T 位置、HPCO 和中间片 Inlet side, T position, HPCO and intermediate sections
06	远程控制 Remote control	12/24 VDC、先导供油、回油、电流控制 12/24 VDC, pilot supply, return and current control
07	安装条件 Installation	尺寸、重量、安装空间、接头及操作杆 Dimensions, weight, clearance, fittings and levers

逐联配置记录

Section-by-section configuration record

建议按“联号 / 执行机构 / 阀芯 / 控制 / 复位 / 油路 / A、B 油口 / 辅助阀及压力”记录每个工作片。进油片、回油片和中间片另行列出，整机确认后形成完整订货行。

Record each section by number, actuator, spool, actuation, return, circuit, A/B ports and auxiliary valves/settings. List inlet, outlet and intermediate sections separately, then compile the complete order after system confirmation.

手动操作杆需单独订购；不同控制组件和中间片应纳入安装空间核对。

Order manual levers separately. Include controls and intermediate sections in the installation-clearance review.

技术注释与资料依据

Technical notes and source references

下表为 HC-D6 电液组件补充条件，须按选定组件核对；主阀 20 bar 的 T 口上限不能作为先导回油允许背压。

The table gives supplementary HC-D6 electrohydraulic-kit conditions; verify the selected kit. The 20 bar main T limit is not the permitted pilot-return pressure.

HC 电液组件 / Electrohydraulic kit	参数 / Value
最大进油压力 / 减压后压力 Maximum inlet / reduced pressure	350 / 16 bar
先导 T 回油最大背压 Maximum pilot T backpressure	3 bar
先导过滤 / 推荐管路 Pilot filtration / recommended pipe	25 µm absolute / Ø6 mm, G 1/4
工作温度 Operating temperature	-20°C to +80°C

HC 比例控制 F2600 / F2610

HC proportional control F2600 / F2610

电压 / Voltage	R20 (Ω)	电流 / Current
12 VDC	3.7	0.9-1.8 A
24 VDC	15.5	0.45-0.9 A

建议 PWM 电流控制频率 60-80 Hz。HC 内置减压方案要求中位通道具有至少 8 bar 阻力，并示出 1 mm 节流孔；该条件仅用于对应先导方案，不能与 3 bar 先导回油上限混同。

Recommended PWM current-control frequency is 60-80 Hz. The HC integral reducing-valve circuit specifies at least 8 bar resistance in the neutral gallery and shows a 1 mm orifice. This is specific to that pilot circuit and is distinct from the 3 bar pilot-return limit.

编制依据与适用范围

Sources and scope

恒石《产品样册 20200411》PDF 第 3-16 页；HC-D6 专册 hcd6_04.pdf：PDF 第 3-49 页。恒石代码为主，HC 补充项已标注。D4 样册仅作为版式参考，封面使用用户提供的实拍图片。

Hons Product Catalogue 20200411, PDF pages 3-16; HC-D6 hcd6_04.pdf, PDF pages 3-49. Hons codes are primary; HC supplements are labelled. D4 supplies the layout reference and the cover uses the supplied product photograph.

本样册为选型资料；照片不作为型号或安装尺寸的判定依据。特殊配置以确认技术文件为准。

This catalogue supports selection. Photographs do not establish model identity or installation dimensions. Confirm special configurations in technical documents.

恒石液压

Hons Hydraulics

D6

片式多路阀

Sectional Directional Control Valve

湖南恒石液压技术有限公司

Hunan Hons Hydraulic Technology Co., Ltd.

100 L/min | 350 bar | 1-12 sections

官网 / WEBSITE

扫码访问官网

微信 / WECHAT

扫码添加微信

本样册为标准产品选型资料。可供配置、特殊应用及最终安装参数以确认的技术文件为准。

This catalogue gives standard selection information. Confirm available options, special applications and final installation data in approved technical documents.